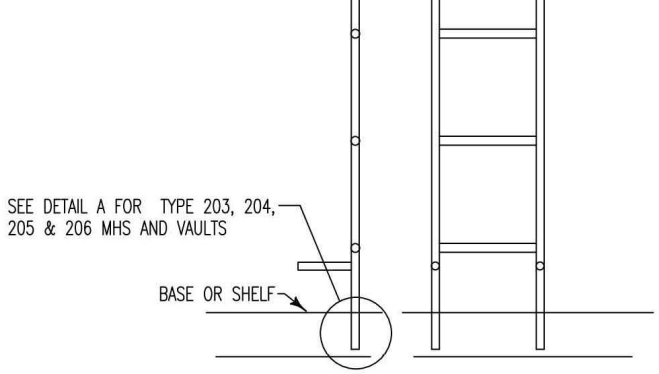

LADDER

2. STEPS AND PREFABRICATED LADDER SHALL BE FIBERGLASS (TYP)

3. STEPS AND HANDHOLDS SHALL BE INSTALLED AT 1'-0"SPACING. WHEN THE DISTANCE FROM THE LAST (HIGHEST) STEP OR HANDHOLD TO THE TOP OF THE MH FRAME EXCEEDS 1'-0" AND ANOTHER STEP OR HANDHOLD CANNOT BE INSTALLED BECAUSE OF THE LOCATION OF THE MH FRAME, A HANDHOLD WILL BE INSTALLED AT 1/2 DISTANCE BETWEEN THE LAST STEP OR HANDHOLD AND THE TOP OF THE MH FRAME.

ALL STEPS IN ANY MH SHALL BE

HANDHOLD

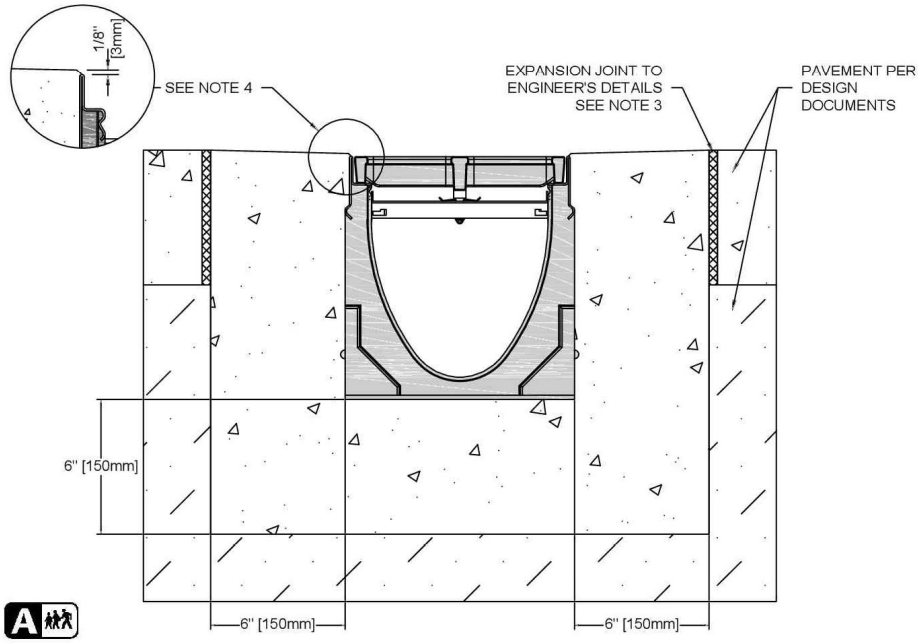

NOTES:
1. IT IS NECESSARY TO ENSURE MINIMUM DIMENSIONS SHOWN ARE SUITABLE FOR EXISTING GROUND CONDITIONS. *ENGINEERING ADVICE MAY BE REQUIRED.*
2. MINIMUM CONCRETE STRENGTH OF 4,000 PSI IS RECOMMENDED. CONCRETE SHOULD BE VIBRATED TO ELIMINATE AIR POCKETS.
3. EXPANSION AND CONTRACTION CONTROL JOINTS AND REINFORCEMENT ARE RECOMMENDED TO PROTECT CHANNEL AND CONCRETE SURROUND. *ENGINEERING ADVICE MAY BE REQUIRED.*
4. THE FINISHED LEVEL OF THE CONCRETE SURROUND MUST BE APPROX. 1/8" [3mm] ABOVE THE TOP OF THE CHANNEL EDGE.
5. CONCRETE BASE THICKNESS SHOULD MATCH SLAB THICKNESS. ENGINEERING ADVICE MAY BE REQUIRED TO DETERMINE PROPER LOAD CLASS.
6. REFER TO ACO'S LATEST INSTALLATION INSTRUCTIONS FOR FURTHER DETAILS.

SPECIFICATION CLAUSE

K200 KLASSIKDRAIN - LOAD CLASS A

GENERAL
THE SURFACE DRAINAGE SYSTEM SHALL BE POLYMER CONCRETE K200 CHANNEL SYSTEM WITH GALVANIZED STEEL EDGE RAILS AS MANUFACTURED BY ACO POLYMER PRODUCTS, INC.

MATERIALS
CHANNELS SHALL BE MANUFACTURED FROM POLYESTER RESIN POLYMER CONCRETE WITH AN INTEGRALLY CAST-IN GALVANIZED STEEL EDGE RAIL. MINIMUM PROPERTIES OF POLYMER CONCRETE WILL BE AS FOLLOWS:

COMPRESSIVE STRENGTH:	14,000 PSI
FLEXURAL STRENGTH:	4,000 PSI
TENSILE STRENGTH:	1,500 PSI
WATER ABSORPTION:	0.07%
FROST PROOF	YES
DILUTE ACID AND ALKALI RESISTANT	YES
B117 SALT SPRAY TEST COMPLIANT	YES

THE SYSTEM SHALL BE 8" (200mm) NOMINAL INTERNAL WIDTH WITH A 10.2" (260mm) OVERALL WIDTH AND A BUILT-IN SLOPE OF 0.5%. CHANNEL INVERT SHALL HAVE DEVELOPED "V" SHAPE. ALL CHANNELS SHALL BE INTERLOCKING WITH A MALE/FEMALE JOINT.

THE COMPLETE DRAINAGE SYSTEM SHALL BE BY ACO POLYMER PRODUCTS, INC. ANY DEVIATION OR PARTIAL SYSTEM DESIGN AND/OR IMPROPER INSTALLATION WILL VOID ANY AND ALL WARRANTIES PROVIDED BY ACO POLYMER PRODUCTS, INC.

CHANNEL SHALL WITHSTAND LOADING TO PROPER LOAD CLASS AS OUTLINED BY EN 1433. GRATE TYPE SHALL BE APPROPRIATE TO MEET THE SYSTEM LOAD CLASS SPECIFIED AND INTENDED APPLICATION. GRATES SHALL BE SECURED USING 'QUICKLOK' BOLTLESS LOCKING SYSTEM. CHANNEL AND GRATE SHALL BE CERTIFIED TO MEET THE SPECIFIED EN 1433 LOAD CLASS. THE SYSTEM SHALL BE INSTALLED IN ACCORDANCE WITH THE MANUFACTURER'S INSTRUCTIONS AND RECOMMENDATIONS.

K2-A-ECP

ACO

DATE: 08/25/15

K200 - KLASSIKDRAIN - LOAD CLASS: A
Exposed Concrete Pavement

INSTALLATION DRAWING - ACO DRAIN

ACO Polymer Products, Inc.

825 W. Beechcraft St Casa Grande, AZ 85122 Tel: 520-421-9988 Fax: 520-421-9899	9470 Pinecone Dr. Mentor, OH 44060 Tel: 440-639-7230 Fax: 440-639-7235	4211 Pleasant Rd. Fort Mill, SC 29708 Tel: 440-639-7230 Fax: 803-802-1063

Arizona Tel: 888-490-9552 e-mail: sales@acousa.com Ohio Tel: 800-543-4764 www.acousa.com South Carolina Tel: 800-543-4764

NTS

Trench Drain Detail 10

\\server6\civil_2014\P14JAJ-028\CAD\19W_DIL_CIVIL.dwg 11/24/2014 2:20 PM SSE

Provided to Builders Exchange of WA, Inc. For usage Conditions Agreement see www.bxwa.com - Always Verify Scale